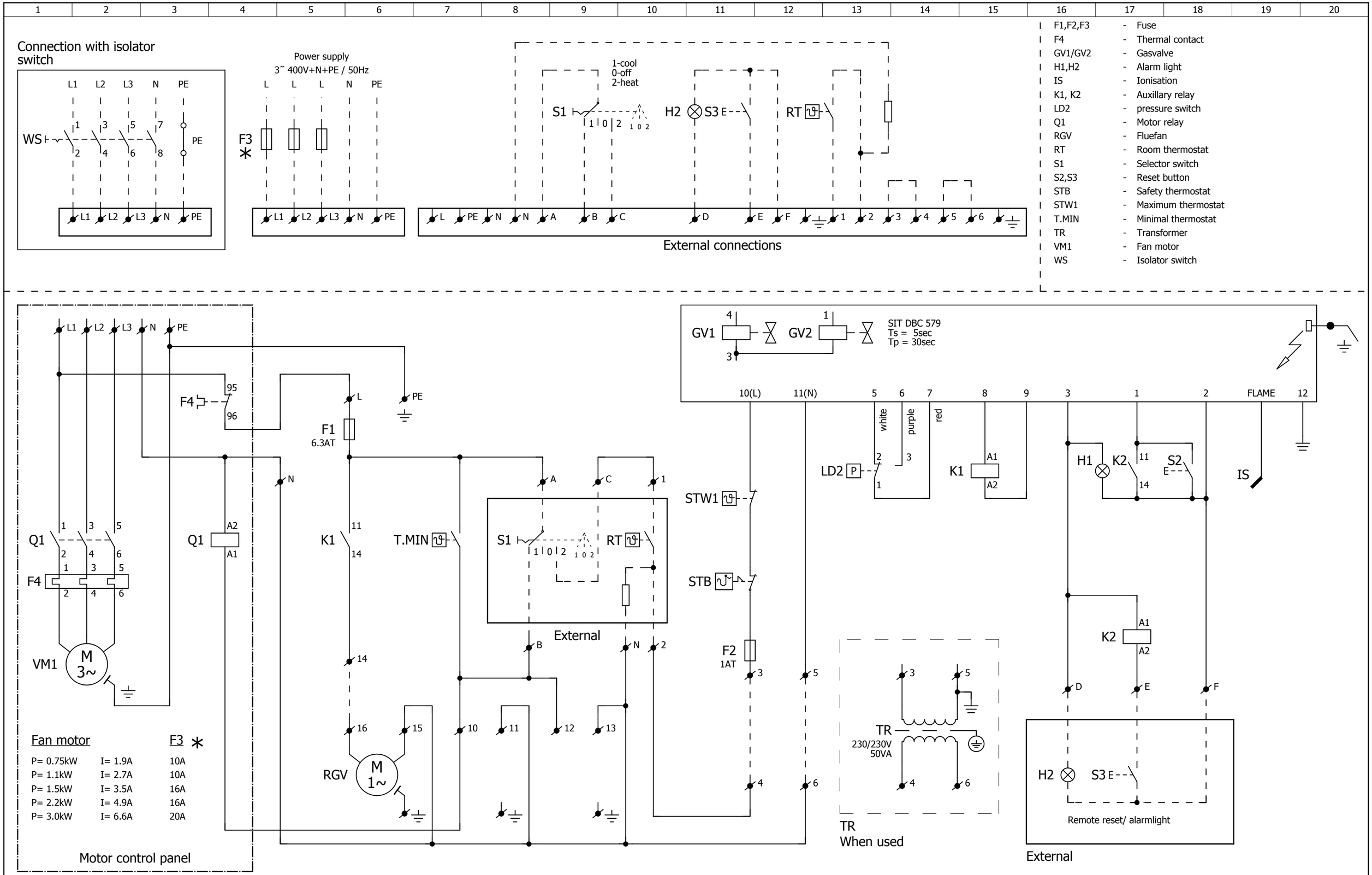

mark climate technology	G(N)CE			Drawing number	WLV-012002-EN		
		Get.	J.W.	Date	18-1-2011	Group	G(N)CE	Type	
		Gec.		Norm		Art.nr.		Version	1.2

1